Cambridge Assessment International Education

Cambridge IGCSE™

CANDIDATE NAME	

CENTRE NUMBER						CANDIDATE NUMBER				

PHYSICS **0625/04**

Paper 4 Theory (Extended) **For examination from 2023**

SPECIMEN PAPER **1 hour 15 minutes**

You must answer on the question paper.

No additional materials are needed.

INSTRUCTIONS

- Answer **all** questions.
- Use a black or dark blue pen. You may use an HB pencil for any diagrams or graphs.
- Write your name, centre number and candidate number in the boxes at the top of the page.
- Write your answer to each question in the space provided.
- Do **not** use an erasable pen or correction fluid.
- Do **not** write on any bar codes.
- You may use a calculator.
- You should show all your working and use appropriate units.
- Take the weight of 1.0 kg to be 9.8 N (acceleration of free fall = 9.8 m / s^2).

INFORMATION

- The total mark for this paper is 80.
- The number of marks for each question or part question is shown in brackets [ ].

This document has **16** pages. Any blank pages are indicated.

© UCLES 2020

www.root19.com +91 - 9969 353 391

1 Fig. 1.1 shows the speed-time graph for a vehicle accelerating from rest.

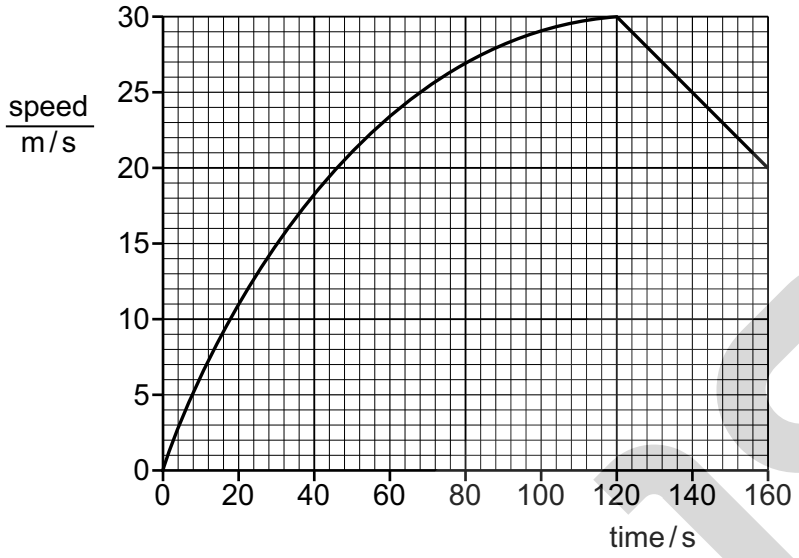

Fig. 1.1

(a) Calculate the acceleration of the vehicle at time t = 30 s.

acceleration = ... [3]

(b) Without further calculation, state how the acceleration at time t = 100 s compares to the acceleration at time t = 10 s.
Using ideas about forces, explain why any change in the acceleration has occurred.

.....

.....

..... [2]

(c) Determine the distance travelled by the vehicle between time t = 120 s and time t = 160 s.

distance = ... [3]

[Total: 8]

© UCLES 2020
www.root19.com

+91 - 9969 353 391

2 **(a)** Complete the definitions by giving the name of each quantity.

mass × acceleration = ...

force × time = ...

[2]

(b) Fig. 2.2 shows a man using a golf club to hit a ball.

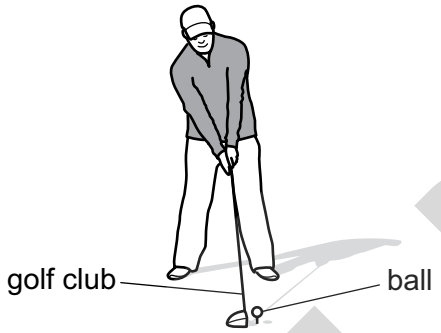

Fig. 2.2

The ball has a mass of 0.046 kg. The golf club is in contact with the ball for a duration of 5.0×10^{-4} s and the ball leaves the golf club at a speed of 65 m / s.

(i) Calculate the momentum of the ball as it leaves the golf club.

momentum = ... [2]

(ii) Calculate the average resultant force acting on the ball while it is in contact with the golf club.

average force = ... [2]

(iii) While the golf club is in contact with the ball, the ball becomes compressed and changes shape.

State the type of energy stored in the ball during its contact with the golf club.

..... [1]

[Total: 7]

3 Fig. 3.1 shows solar cells that use radiation from the Sun to generate electrical power.

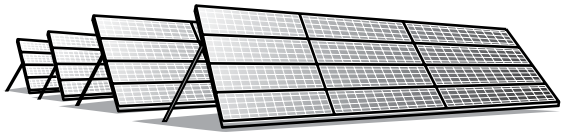

Fig. 3.1

(a) **(i)** State the name of the process which releases energy in the Sun.

..... [1]

(ii) Describe what happens in this process.

.....

.....

..... [2]

(b) Apart from solar cells, there are other energy resources used on Earth for which the radiation from the Sun is the main source.

State the name of **one** of these energy resources and explain whether it is renewable.

name of energy resource .....

explanation .....

.....
[2]

(c) State **two** advantages and **two** disadvantages of using solar cells to generate electrical power.

advantage 1 .....

.....

advantage 2 .....

.....

disadvantage 1 .....

.....

disadvantage 2 .....

.....
[4]

[Total: 9]

www.root19.com +91 - 9969 353 391

4 Fig. 4.1 shows a balloon filled with helium that is used to lift measuring instruments to a great height above the Earth's surface.

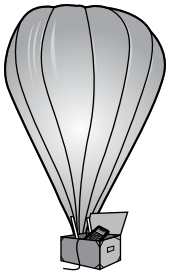

Fig. 4.1

(a) Using ideas about momentum, explain how the atoms of helium produce a force on the wall of the balloon.

.....

.....

.....

..... [3]

(b) At ground level, the pressure of the helium in the balloon is 1.0×10^5 Pa. The volume of the helium is $9.6\ m^3$.

The balloon is released and it rises quickly through the atmosphere. The volume of the helium increases. The temperature of the helium remains constant.

(i) Explain why the pressure in the balloon decreases as the balloon rises.
You should refer to helium atoms in your answer.

.....

.....

..... [2]

(ii) Calculate the pressure of the helium when its volume is $12\ m^3$.

pressure = ... [2]

[Total: 7]

www.root19.com +91 - 9969 353 301

5 **(a)** Compare the arrangement and motion of the particles in ice and in liquid water.

arrangement .....

.....

motion .....

.....
[2]

(b) A lake has a layer of ice on its surface. The area of the lake is 1800 m^2. The ice has a thickness of 0.025 m. The density of ice is 920 kg / m^3.

(i) Calculate the mass of ice on the lake.

mass = ... [2]

(ii) At night, the temperature of the ice on the lake falls by 3.5 °C.
The specific heat capacity of ice is 2.1×10^3 J / kg °C.
Calculate the change in energy as the temperature falls.

energy = ... J [2]

[Total: 6]

© UCLES 2020
www.root19.com

+91 - 9969 353 391

BLANK PAGE

© UCLES 2020
www.root19.com

+91 - 9969 353 301

6 **(a)** Fig. 6.1 shows a converging lens and its principal axis. The points F_1 and F_2 are each a principal focus of the lens.

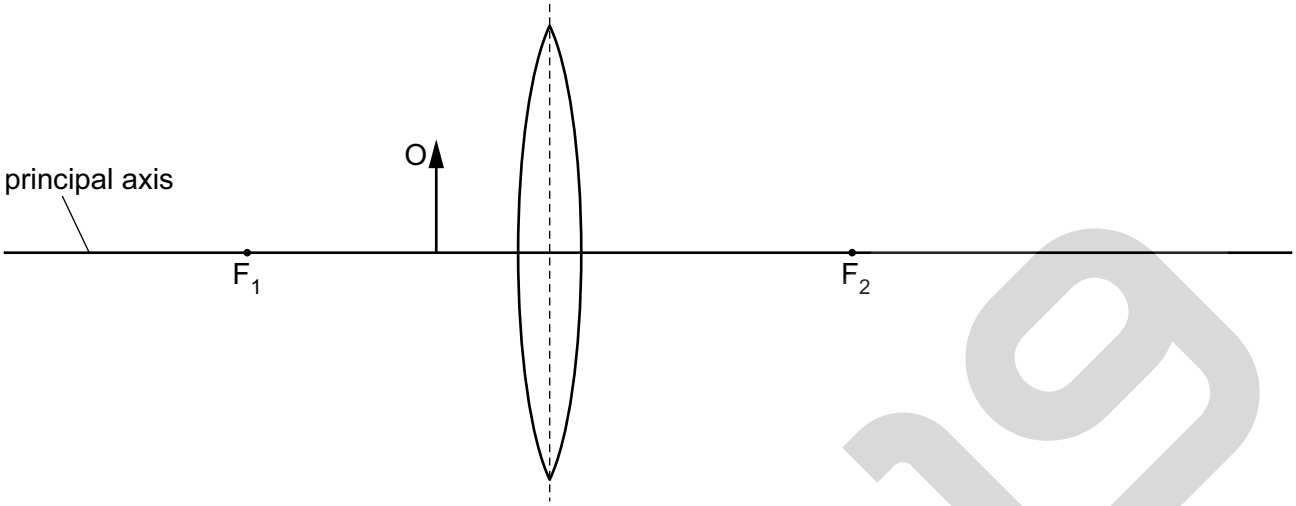

Fig. 6.1

An object O is placed between F_1 and the lens.

(i) On Fig. 6.1, draw two rays from the top of the object O to locate the image. Label the image I. [3]

(ii) The object O is moved to the left along the principal axis so that it is further from the lens than F_1.

Fig. 6.2 is a diagram of the new arrangement with the new image shown.

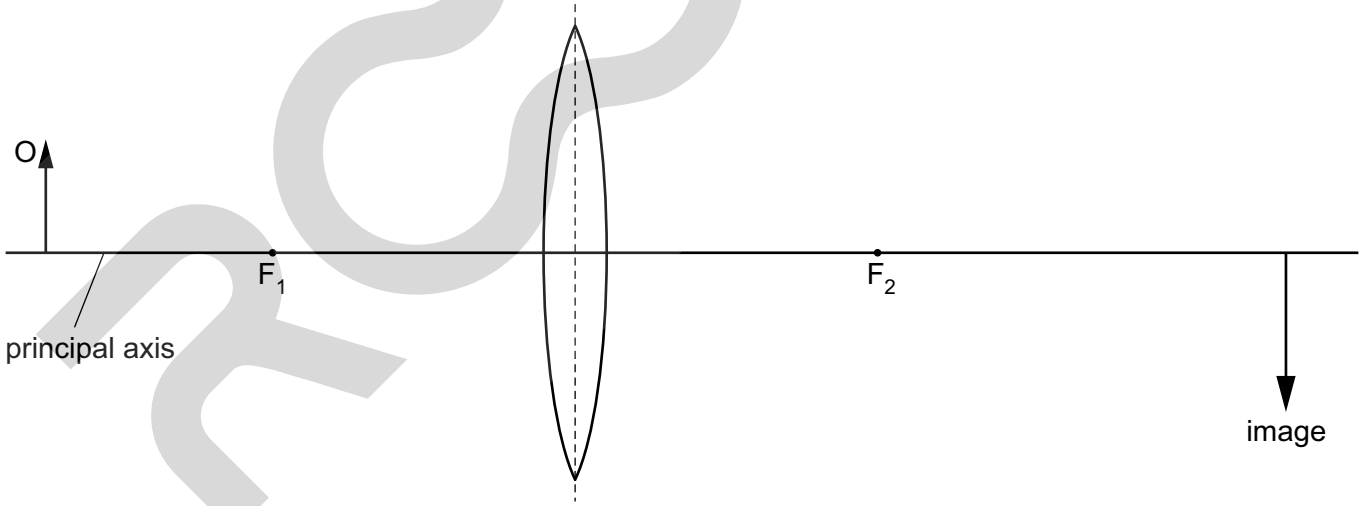

Fig. 6.2

Underline **three** of the terms below that describe the image shown in Fig. 6.2.

diminished **enlarged** **inverted** **real** **same size** **upright** **virtual**

[2]

www.root19.com +91 - 9969 353 391

(b) Fig. 6.3 shows yellow light passing through a glass prism.

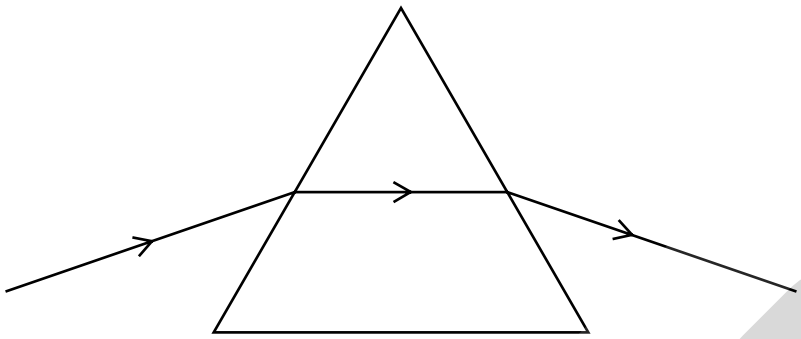

Fig. 6.3

Blue light enters the prism along the same path as the yellow light.

On Fig. 6.3, draw the path of the blue light as it enters, passes through and leaves the prism. [2]

[Total: 7]

www.root19.com +91 - 9969 353 301

7 **(a)** State a typical value for the speed of sound in air.

speed = ... [1]

(b) A sound wave in air has a wavelength of 22 mm.

Using your value for the speed of sound in **(a)**, calculate the frequency of the sound wave.

frequency = ... [2]

(c) Fig. 7.1 shows a solid block made from hot liquid metal. As the liquid cooled, a bubble formed **inside** the block. The bubble is **not** visible from outside the block.

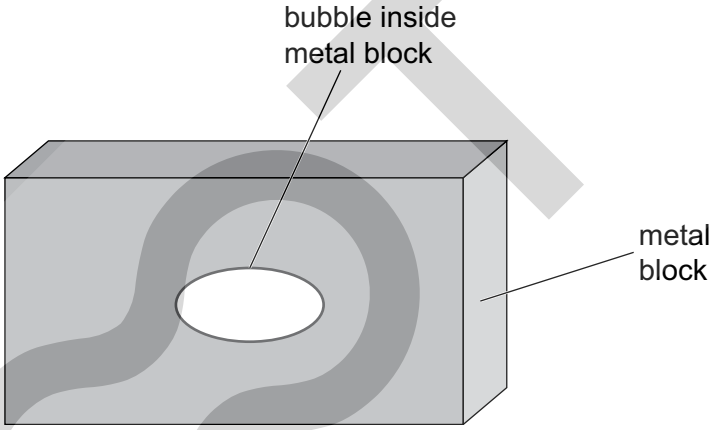

Fig. 7.1

Describe and explain how to use ultrasound to determine the size and position of the bubble inside the metal block. You may draw on the diagram.

.....

.....

.....

.....

.....

.....

..... [4]

[Total: 7]

www.root19.com +91 - 9969 353 391

8 Fig. 8.1 is a circuit diagram.

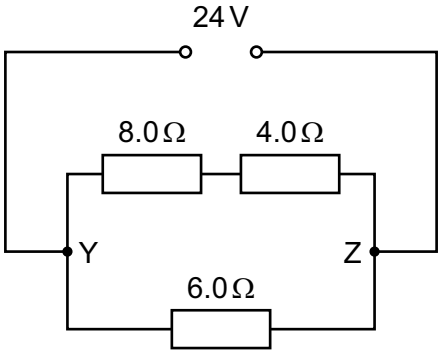

Fig. 8.1

(a) Calculate the combined resistance between Y and Z.

resistance = ... [4]

(b) Calculate the potential difference (p.d.) across the 8.0 Ω resistor.

p.d. = ... [2]

[Total: 6]

www.root19.com +91 - 9969 353 301

9 Fig. 9.1 shows a conducting ball that oscillates between two charged plates.

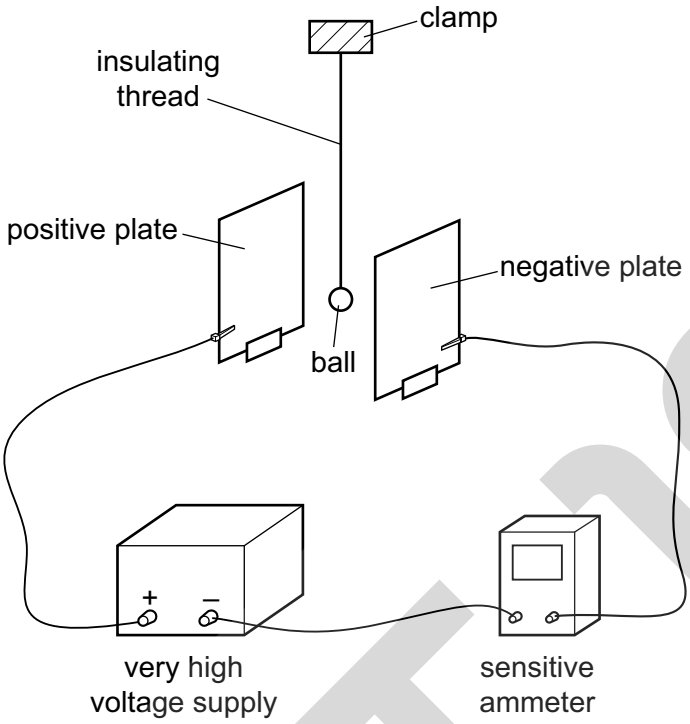

Fig. 9.1

As the ball oscillates, it touches each plate in turn.

(a) Referring to the charge on the ball, explain why the ball moves to the positive plate after touching the negative plate.

.....

.....

.....

..... [2]

(b) State which particles move when there is a current and state the direction in which they move through the sensitive ammeter.

particles: .....

direction: .....
[2]

www.root19.com +91 - 9969 353 391

(c) For each complete oscillation of the ball moving between the plates, a charge of 8.5×10^{-10} C is transferred from one plate to the other. The frequency of oscillation is 4.0 Hz.

Calculate the current shown on the sensitive ammeter.

current = ... [3]

[Total: 7]

© UCLES 2020
www.root19.com

+91 - 9969 353 301

10 **(a)** **(i)** An americium (Am) nucleus decays by the emission of an α-particle into a neptunium (Np) nucleus.

Complete the nuclear equation for this decay.

$^{241}_{95}Am \rightarrow$

[2]

(ii) Americium is used in smoke detectors.
Explain why beta (β) emitters or gamma (γ) emitters are **not** used in smoke detectors.

.....

..... [1]

(b) The half-life of this americium nuclide is 470 years. A sample of this nuclide contains 8.0×10^{14} atoms. After some time, 6.0×10^{14} americium atoms have decayed.

Calculate the time required for this decay.

time = ... [3]

[Total: 6]

www.root19.com +91 - 9969 353 391

11 **(a)** Describe and explain how a stable star is formed.

.....

.....

.....

.....

.....

..... [3]

(b) Describe and explain what can be deduced from cosmic microwave background radiation (CMBR).

.....

.....

.....

.....

.....

..... [3]

[Total: 6]

www.root19.com +91 - 9969 353 301

12 Fig. 12.1 shows a transformer.

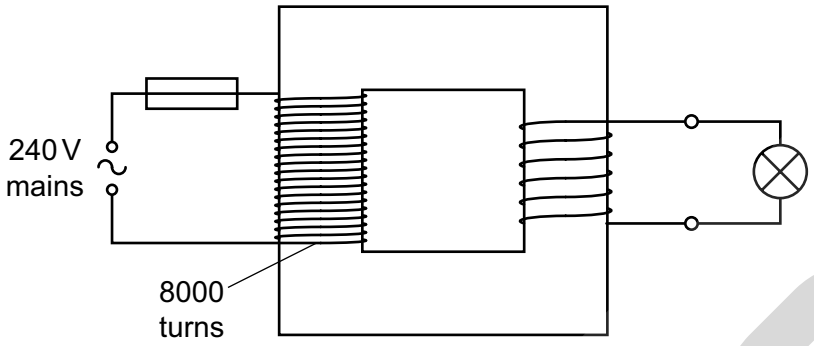

Fig. 12.1

There are 8000 turns in the primary coil of the transformer. The primary coil is connected to a 240 V mains supply. A 6.0 V lamp connected to the secondary coil operates at full brightness.

(a) Calculate the number of turns in the secondary coil.

number of turns = ... [2]

(b) The current in the lamp is 2.0 A. The transformer operates with 100% efficiency.

Calculate the current in the primary circuit.

current = ... [2]

[Total: 4]

Permission to reproduce items where third-party owned material protected by copyright is included has been sought and cleared where possible. Every reasonable effort has been made by the publisher (UCLES) to trace copyright holders, but if any items requiring clearance have unwittingly been included, the publisher will be pleased to make amends at the earliest possible opportunity.

Cambridge Assessment International Education is part of the Cambridge Assessment Group. Cambridge Assessment is the brand name of the University of Cambridge Local Examinations Syndicate (UCLES), which itself is a department of the University of Cambridge.

www.root19.com +91 - 9969 353 391